Transmittal, reproduction, dissemination and/or editing of this document as well as utilization of its contents and communication thereof to others without express authorization are prohibited.
未经允许禁止传输、复制、编辑该文档，以及利用其内容进行交流

REVISION RECORD				
REV	ECN	DESCRIPTION	DRFT	DATE

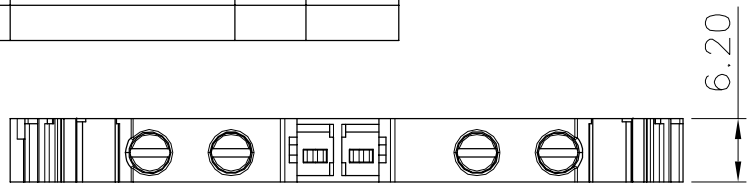

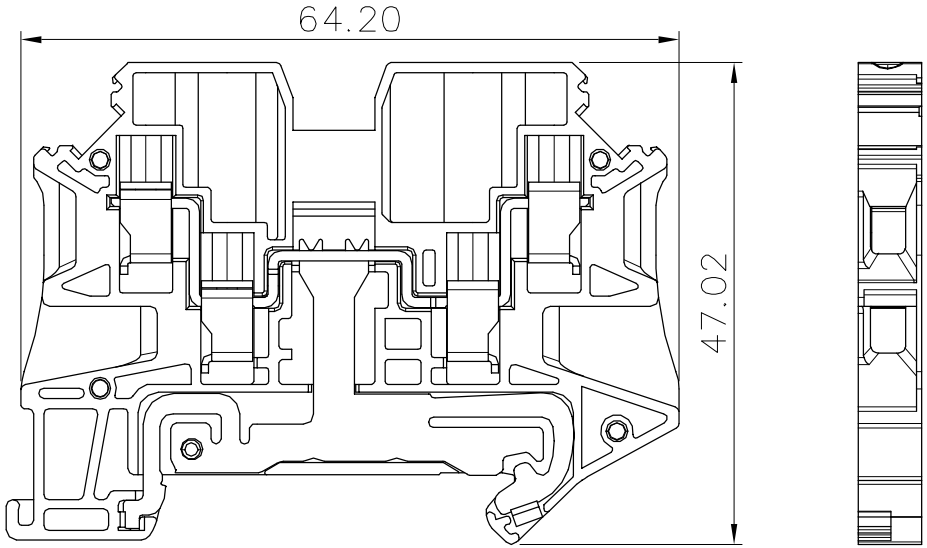

Connection method:
1.For solid wire, peeling wire in right length, fix in by rated torque force.
2.For stranded wire,connect directly after peeling in right length,or furruled on wire and fix in by rated torque force.
(Attention: torque force should be equable, no explosive power.)

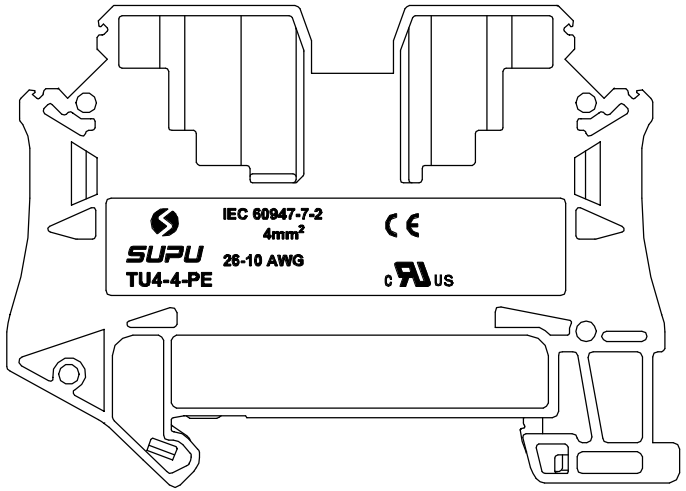

NOTES:
UL/CUL Standard
1.Conductor cross section : 26~10AWG
2.Rated torque : M3 , 5.3Lb.in
3.Rated Voltage/Current :

Use group	B	C	D
Rated voltage(V)	300	300	600
Rated current(A)	/	/	/

IEC Standard
1.Conductor cross section :

Wire range(Solid/Stranded)	0.2-4mm²
Solid	0.2-6mm²
Stranded	0.2-4mm²
Stranded with ferrules without plastic sleeve	0.2-4mm²
Stranded with ferrules with plastic sleeve	0.2-4mm²

2.Rated torque : M3 , 0.5N•m
3.Rated Voltage/Current :

Surge voltage category	Ⅲ
Pollution degree	3
Rated surge voltage(KV)	8
Rated voltage(V)	800
Rated current(A)	/

Material:

Insulator	PA66	UL94 V-0
Cage	Steel	Zn plated
Conductor	Copper alloy	Sn plated
Screw	Steel	Zn plated
Ground Pin	Copper alloy	Sn plated

General information:
1.Dimension shall be interpreted per ASME Y14.5-2009
2.Stripping length : 9mm
3.Operating temperature: -40°C~+105°C
4.RoHS Compliance
5.Undimensioned Tolerances:

Pitch Range In mm			Nominal Dimension Range In mm					— ⌒ ⌭
TO 6	Over 6 TO 10	Over 10 TO 24	TO 30	Over 30 TO 60	Over 60 TO 100	Over 100 TO 150	Over 150	0.1/10
								∠
±0.15	±0.20	±0.30	±0.30	±0.50	±0.70	±1.00	±1.30	±2°

HOW TO ORDER:
TU4-4-PE
Sereies No.
Color: PE: Yellow green

订货号 Order No.	TU4-4-PE		名 称 Name	TU系列4mm² 螺钉二进二出接地端子	未注公差 Tolerance	表面 Surface	
项 目 Item	签 字 Signature	日 期 Date			Tolerances Table	VDI21	
设 计 Design	CJS	11/19/20″	图 号 Drawing No.	PRM...	版本号 Revision Number	重量 Weight	比例 Scale
审 核 Check	CW	11/19/20″	材 料 Material	Notes	D0-1	/	1:1
工 艺 Process	-	-	物料号 Item No.		第1页/共1页 1 of 1	mm	
标准化 Unify	-	-		...	SUPU 宁波速普电子有限公司 NINGBO SUPU ELECTRONICS CO.,LTD.		
批 准 Approve	LWL	11/19/20″					

借通用件登记 Common Part
原图号 Old Draw. No.
底图总号 Assembly No.