WG16032A Graphic 160x32 dots

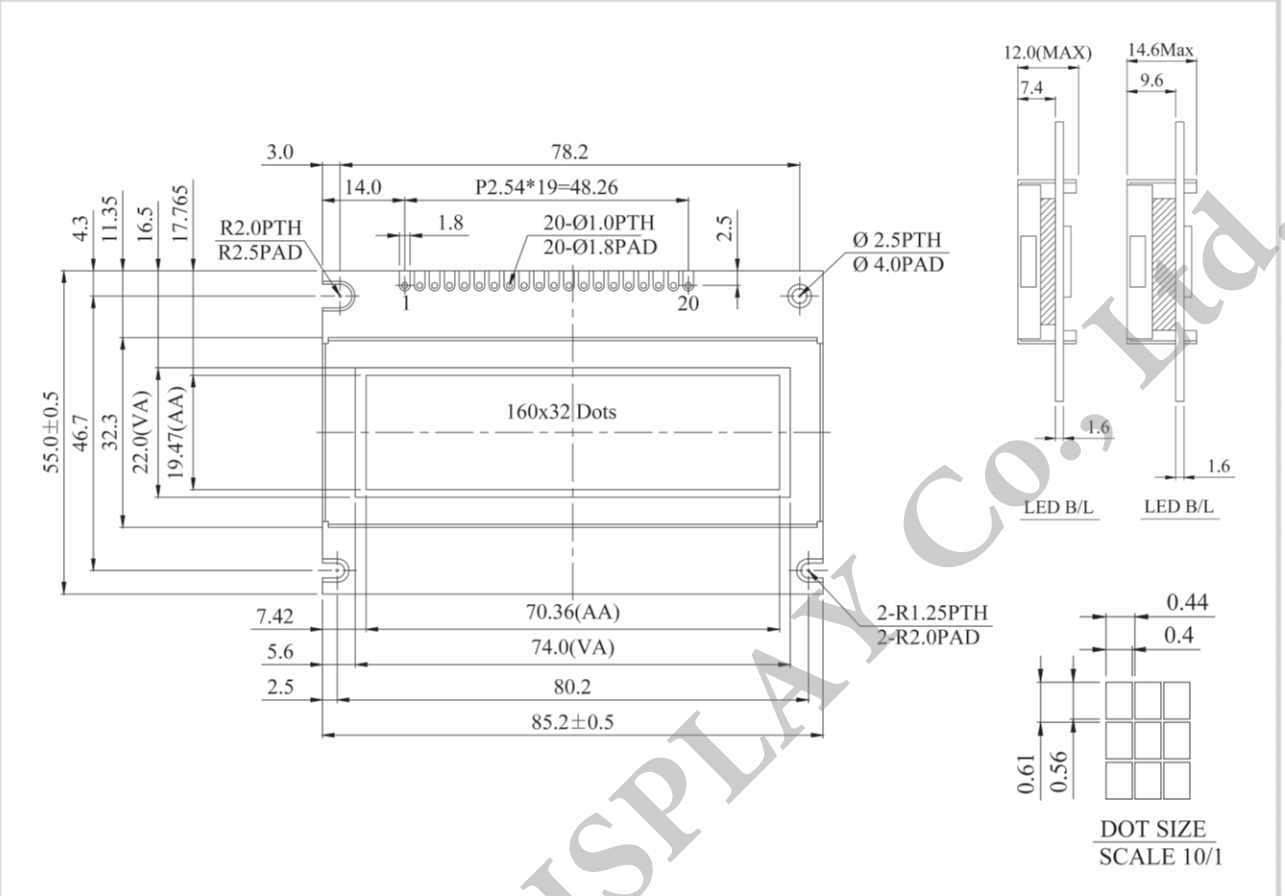

Feature

1. Available for external oscillation 2KHz
2. Built-in controller Avant (SBN1661G or equivalent)
3. 1/32 duty cycle
4. N.V. optional for 3V power supply

Pin No.	Symbol	Description
1	V_{SS}	Ground
2	V_{DD}	Power supply for logic
3	V_O	Contrast Adjustment
4	A0	Data/ Instruction select signal
5	CS1	Cs1=0 cs2=0 chip select signal for s1~s61 Cs1=0 cs2=1 chip select signal for s62~s141
6	CS2	Cs1=1 cs2=0 chip select signal for s142~s168
7	CL	External clock 2KHZ
8	E	Enable signal
9	R/W	Read/Write select signal
10	DB0	Data bus line
11	DB1	Data bus line
12	DB2	Data bus line
13	DB3	Data bus line
14	DB4	Data bus line
15	DB5	Data bus line
16	DB6	Data bus line
17	DB7	Data bus line
18	RST	Controller reset signal, Active Low
19	A	Power supply for B/L +
20	K	Power supply for B/L -

Mechanical Data

Item	Standard Value	Unit
Module Dimension	85.2 x 55.0	mm
Viewing Area	74.0 x 22.0	mm
Mounting Hole	80.2 x 46.7	mm
Dot Pitch	0.44 x 0.61	mm
Dot Size	0.40 x 0.56	mm

Electrical Characteristics

Item	Symbol	Standard Value typ.	Unit
Input Voltage	VDD	5.0	V
Recommended LCD Driving Voltage for Normal Temp. Version module @25°C	VDD-VO	---	V

WINSTAR DISPLAY Co., Ltd.