Kingbright

5.6mm x 3.0mm SURFACE MOUNT LED LAMP

ATTENTION
OBSERVE PRECAUTIONS
FOR HANDLING
ELECTROSTATIC
DISCHARGE
SENSITIVE
DEVICES

Part Number: KA-5630SELZ4S Hyper Orange

Features

- Size (mm): 5.6 x 3.0 x 0.77.
- Suitable for all SMT assembly and solder process.
- Driver Current: 150mA.
- Available on tape and reel.
- White SMD package, silicone resin.
- Moisture sensitivity level : level 2a.
- RoHS compliant.

Description

The Hyper Orange device is made with TS AlGaInP light emitting diode.
Static electricity and surge damage the LEDS.
It is recommended to use a wrist band or anti-electrostatic glove when handling the LEDs.
All devices, equipment and machinery must be electrically grounded.

Applications

- LCD TV / Monitor Backlight.
- Architectural lighting.
- Decorative lighting.

Package Dimensions

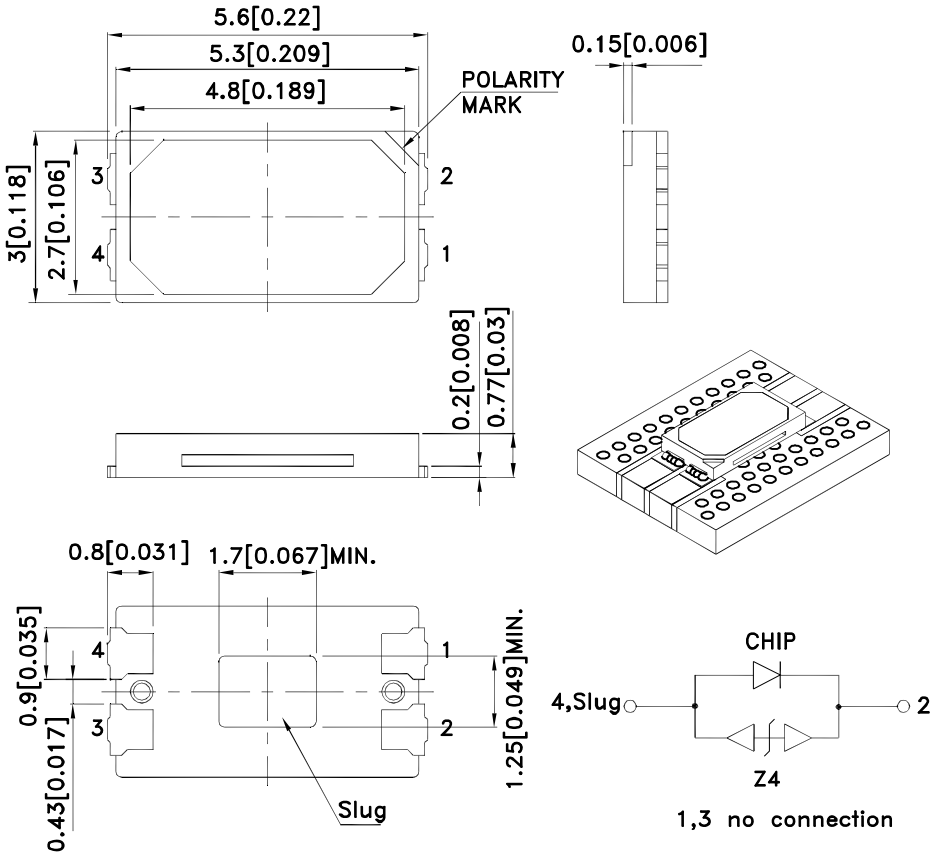

Notes:
1. All dimensions are in millimeters (inches).
2. Tolerance is ±0.25(0.01") unless otherwise noted.
3. The specifications, characteristics and technical data described in the datasheet are subject to change without notice.
4. The device has a single mounting surface. The device must be mounted according to the specifications.

Handling Precautions

Compare to epoxy encapsulant that is hard and brittle, silicone is softer and flexible. Although its characteristic significantly reduces thermal stress, it is more susceptible to damage by external mechanical force.
As a result, special handling precautions need to be observed during assembly using silicone encapsulated LED products. Failure to comply might lead to damage and premature failure of the LED.

1. Handle the component along the side surfaces by using forceps or appropriate tools.

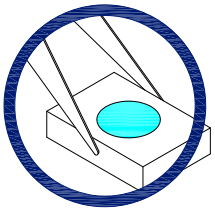

2. Do not directly touch or handle the silicone lens surface. It may damage the internal circuitry.

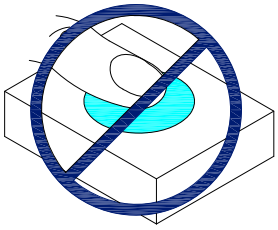

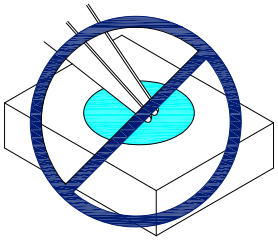

3. Do not stack together assembled PCBs containing exposed LEDs. Impact may scratch the silicone lens or damage the internal circuitry.

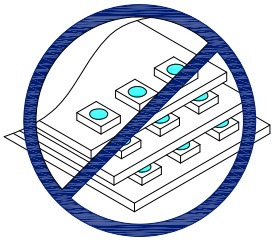

4.1. The inner diameter of the SMD pickup nozzle should not exceed the size of the LED to prevent air leaks.
4.2. A pliable material is suggested for the nozzle tip to avoid scratching or damaging the LED surface during pickup.
4.3. The dimensions of the component must be accurately programmed in the pick-and-place machine to insure precise pickup and avoid damage during production.

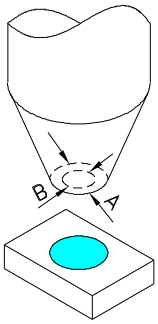

5. As silicone encapsulation is permeable to gases, some corrosive substances such as H_2S might corrode silver plating of leadframe. Special care should be taken if an LED with silicone encapsulation is to be used near such substances.

Detailed application notes are listed on our website.
http://www.kingbright.com/application_notes

Selection Guide

Part No.	Dice	Lens Type	Iv (cd) [2] @ 150mA		Φv (lm) [2] @ 150mA*		Viewing Angle [1]
			Min.	Typ.	Min.	Typ.	2 θ 1/2
KA-5630SELZ4S	Hyper Orange (AlGaInP)	Water Clear	4	5.5	10	12	120 °

Notes:
1. θ1/2 is the angle from optical centerline where the luminous intensity is 1/2 of the optical peak value.
2. Luminous intensity/ luminous Flux: +/-15%.*LEDs are binned according to their luminous flux.
3. Luminous intensity/ luminous Flux value is traceable to the CIE127-2007 compliant national standards.

Absolute Maximum Ratings at T_A=25°C

Parameter	Symbol	Value	Unit
Power Dissipation	P_D	510	mW
Junction Temperature [1]	T_J	110	°C
Operating Temperature	Top	-40 To +100	°C
Storage Temperature	Tstg	-40 To +110	°C
DC Forward Current [1]	I_F	150	mA
Reverse Voltage	V_R	5	V
Peak Forward Current [2]	I_{FM}	270	mA
Thermal Resistance [1] (Junction/ambient)	$R_{th\ j\text{-}a}$	240	°C/W
Thermal Resistance [1] (Junction/solder point)	$R_{th\ j\text{-}S}$	100	°C/W
Electrostatic Discharge Threshold (HBM)		8000	V

Notes:
1. Rth(j-a) Results from mounting on PC board FR4 (pad size≥16 mm^2 per pad)
2. 1/10 Duty Cycle, 0.1ms Pulse Width.

Electrical / Optical Characteristics at T_A=25°C

Parameter	Symbol	Value			Unit
		Min.	Typ.	Max.	
Wavelength at peak emission I_F=150mA	λ peak		626		nm
Dominant Wavelength I_F=150mA	λ dom [1]		618		nm
Spectral bandwidth at 50%$\Phi_{REL\ MAX}$ I_F=150mA	D λ		20		nm
Forward Voltage I_F=150mA	V_F [2]	2.4	2.9	3.4	V
Allowable Reverse Current	I_R			85	mA
Temperature coefficient of λ peak I_F=150mA, -10 ° C≤ T≤100 ° C	TC λ peak		0.11		nm/° C
Temperature coefficient of λ dom I_F=150mA, -10 ° C≤ T≤100 ° C	TC λ dom		0.09		nm/° C
Temperature coefficient of V_F I_F=150mA, -10 ° C≤ T≤100 ° C	TC_V		-3.6		mV/° C

Notes:
1.The dominant Wavelength (λ d) above is the setup value of the sorting machine. (Tolerance λ d : ±1nm.)
2.Forward Voltage: +/-0.1V.
3.Wavelength value is traceable to the CIE127-2007 compliant national standards.

Hyper Orange **KA-5630SELZ4S**

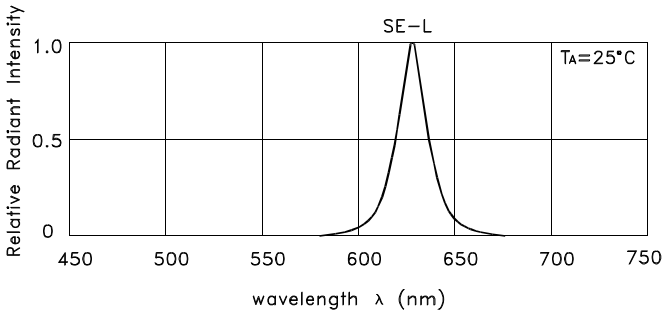

RELATIVE INTENSITY Vs. WAVELENGTH

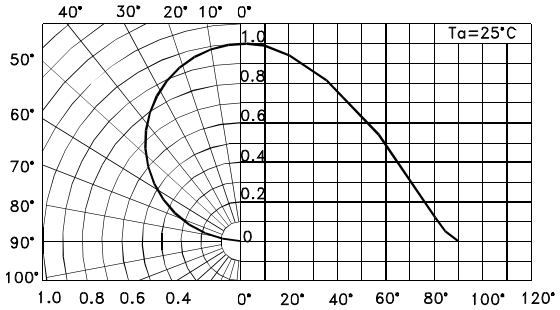

SPATIAL DISTRIBUTION

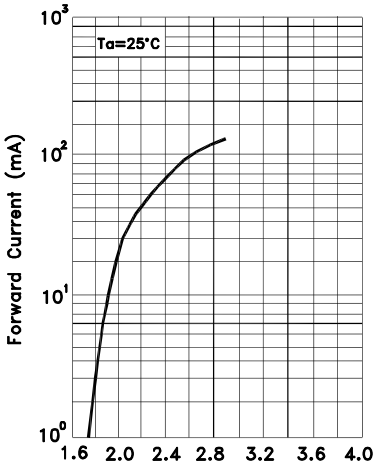

FORWARD CURRENT Vs.
FORWARD VOLTAGE

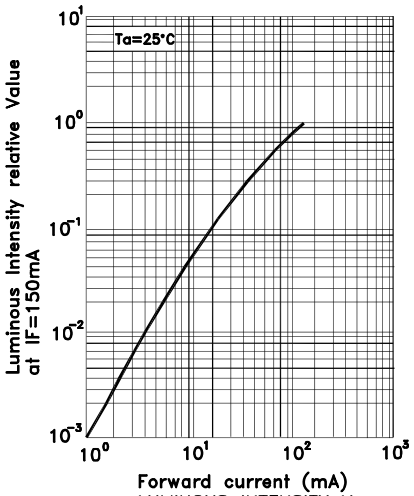

LUMINOUS INTENSITY Vs.
FORWARD CURRENT

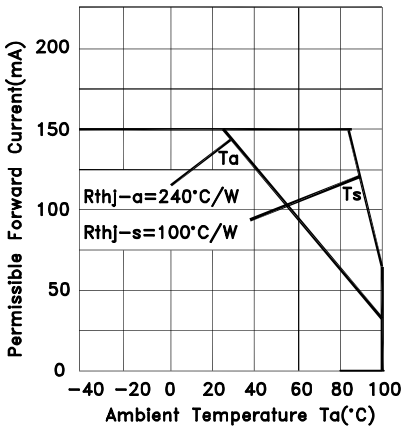

FORWARD CURRENT
DERATING CURVE

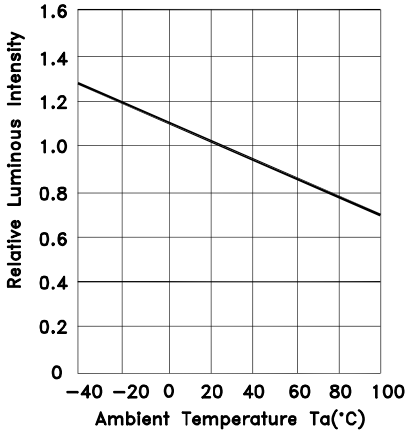

LUMINOUS INTENSITY VS.
AMBIENT TEMPERATURE

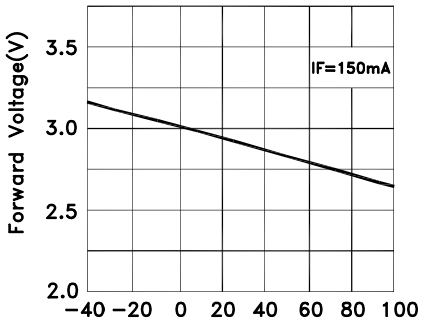

FORWARD VOLTAGE VS.
AMBIENT TEMPERATURE

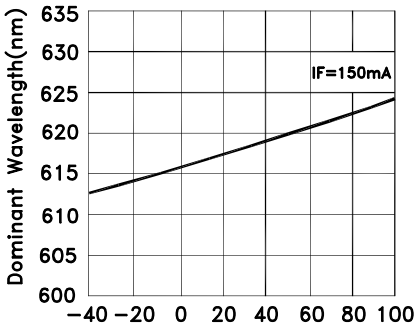

DOMINANT WAVELENGTH VS
AMBIENT TEMPERATURE

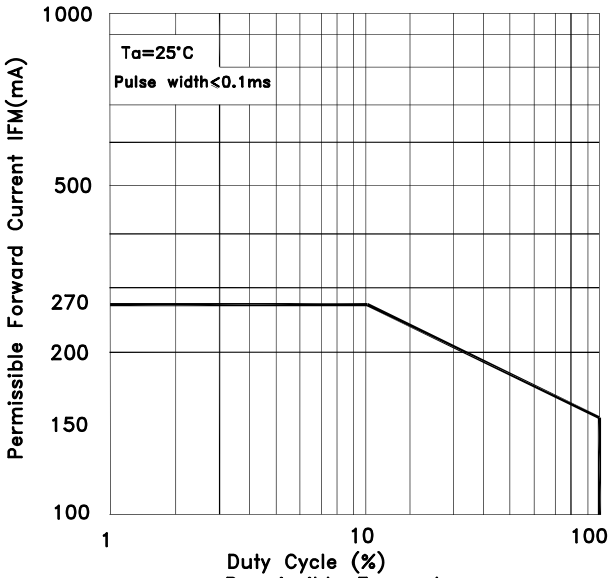

Permissible Forward
Current VS Duty Cycle

KA-5630SELZ4S

Reflow soldering is recommended and the soldering profile is shown below.
Other soldering methods are not recommended as they might cause damage to the product.

Reflow Soldering Profile For Lead-free SMT Process.

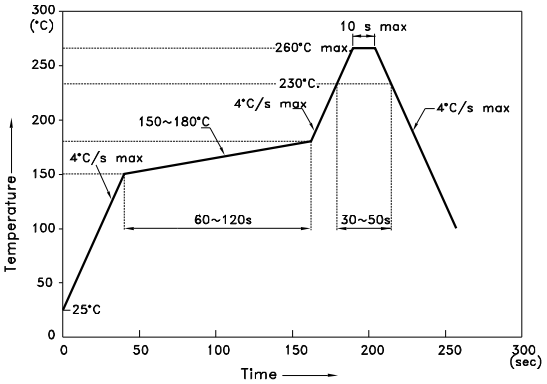

NOTES:
1. We recommend the reflow temperature 245°C(+/-5°C).The maximum soldering temperature should be limited to 260°C.
2. Don't cause stress to the epoxy resin while it is exposed to high temperature.
3. Number of reflow process shall be 2 times or less.

Recommended Soldering Pattern
(Units : mm; Tolerance: ±0.1)

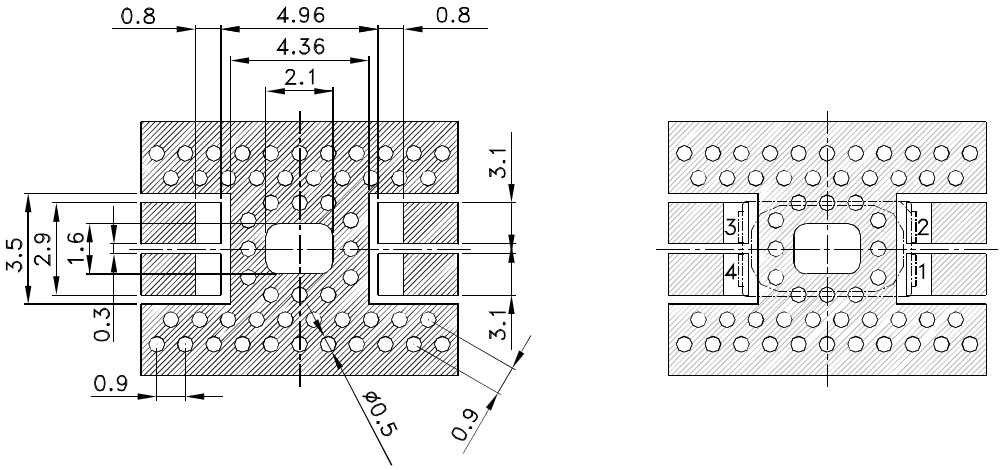

0.8mm FR4-Based Boards
For both the open via PTH and filled and capped via design, the finished hole diameter is 0.5mm. A smaller diameter will lead to an increase of thermal resistance. The recommended distance between two holes is 0.4 mm.This results in a minimal pitch of 0.9mm between the vias.

Tape Dimensions
(Units : mm)

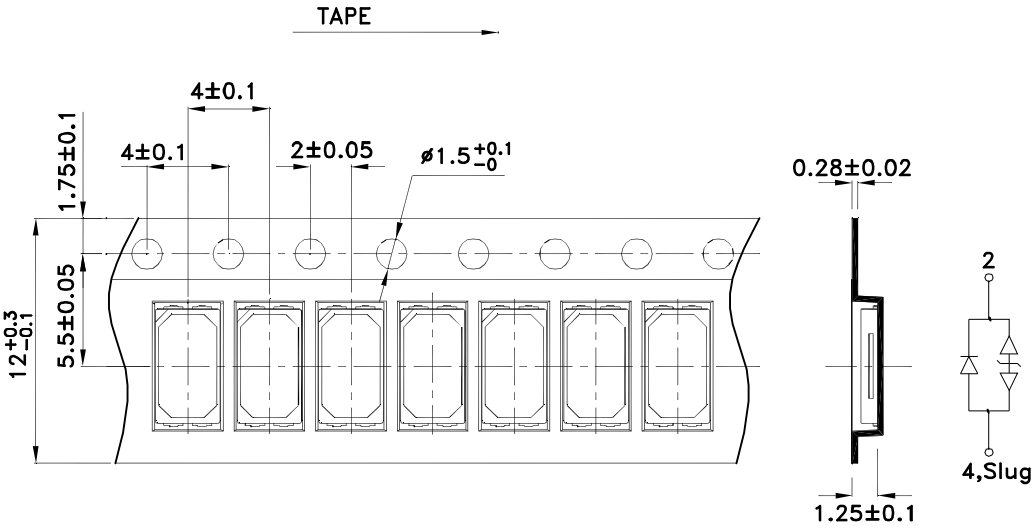

Reel Dimension

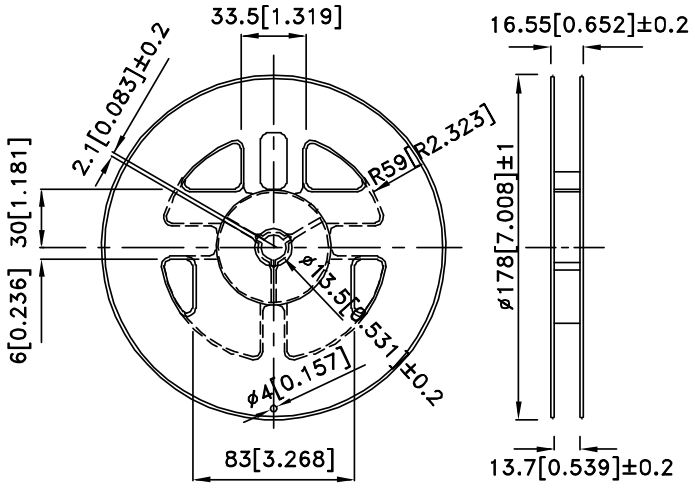

PACKING & LABEL SPECIFICATIONS **KA-5630SELZ4S**