REV	CONTENT	CHK	DATE
V0.0	CONTENT	CXL	20.05.20

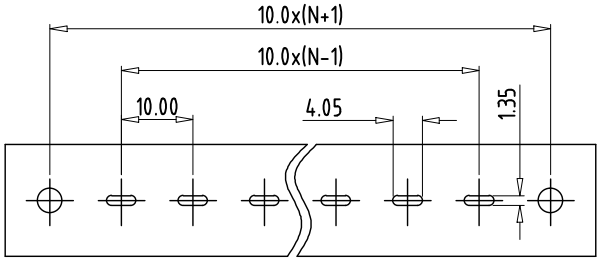

PCB LAYOUT

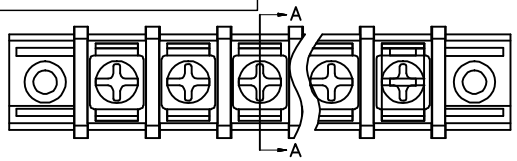

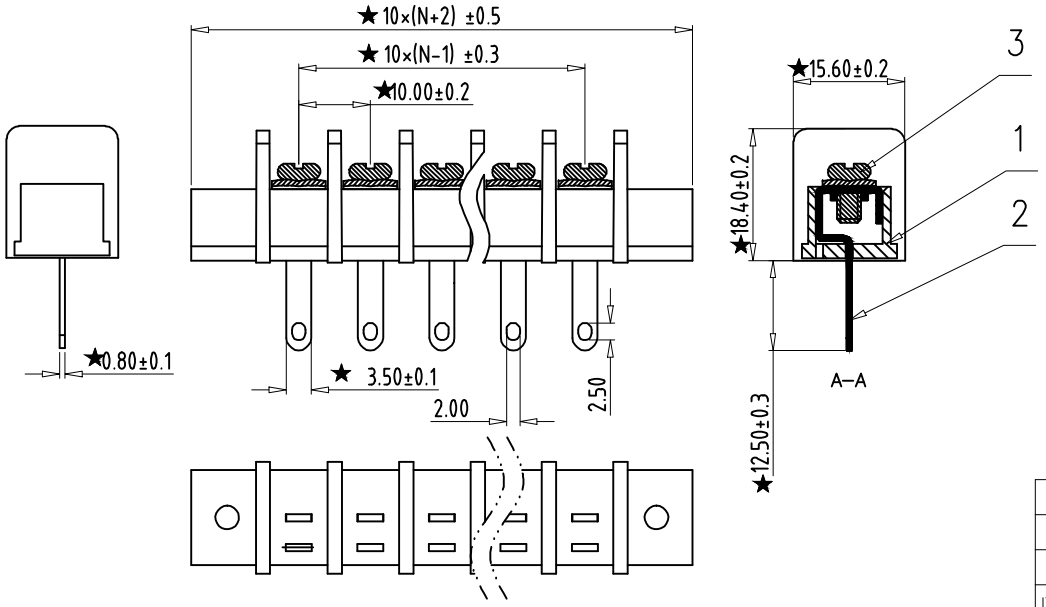

Electrical :

	UL	IEC
1.Rated Voltage :	300V	600V
2.Rated Current :	20A	32A
3.Torque Value :	M4 ,10.53Lb.in	M4, 1.2N.m
4.Wire Range:	22-12AWG	2.5mm^2

5.Stripping Length : 9-10mm
6.Withstanding Voltage : AC4000V/1Min.
7.Operating Temperature : -40 °C~+105°C
8.RoHS Compliance
9.Safty Approval : c UL us CE
10."★" is the key quality control point

GT55H-A – XXP – X X – 00
① ② ③ ④ ⑤

① Sereies NO.

② Poles
02 02Contacts
03 03Contacts
...
24 24Contacts

③ 1 Single Pitch
2 Double Pitch

④ Color: 1 Grey
2 Blue
3 Black
4 Green
5 Orange
6 Red
7 Transparent
8 Yellow
9 White

⑤ Customer Request: 00--Standard

3	SCREW		XX	N	STEEL		Ni Plated
2	Pin header		XX	N	Copper alloy		Tin Plated
1	HOUSING		XX	1	PA66 UL94V-0		/
ITEM	NAME OF PART		NO. OF PART	Q"TY	MATERIAL		NOTE
DWG.	CXL	DATE	20.05.11	SIZE	A4	UNITS mm	SHEET/OF 1 / 1
CHK.		DATE		SCALE	1:1		
APP.		DATE		NAME	GT55H-A-XXP-XX-00		
Golten 宁波冠泰电子有限公司 NINGBO GOLTEN ELECTRONICS CO., LTD.				DWGNO.	XXXX		

Total Pitch Tolerances in mm									Nominal dimension range in mm									⊥		÷	—		//
over 0 to 30	over 30 to 53	over 53 to 70	over 70 to 90	over 90 to 115	over 115 to 150	over 150 to 250	over 250 to 350	over 350 to 500	over 0 to 30	over 30 to 53	over 53 to 70	over 70 to 90	over 90 to 115	over 115 to 150	over 150 to 200	over 200 to 250	over 250 to 320	over 0 to 10	over 10	all	over 0 to 100	over 100 to 150	over 150
±0.18	±0.20	±0.25	±0.3	±0.35	±0.44	±0.60	±0.70	±0.85	±0.20	±0.25	±0.30	±0.35	±0.44	±0.55	±0.70	±0.80	±0.90	0.2	0.3	0.3	0.2	0.3	0.5