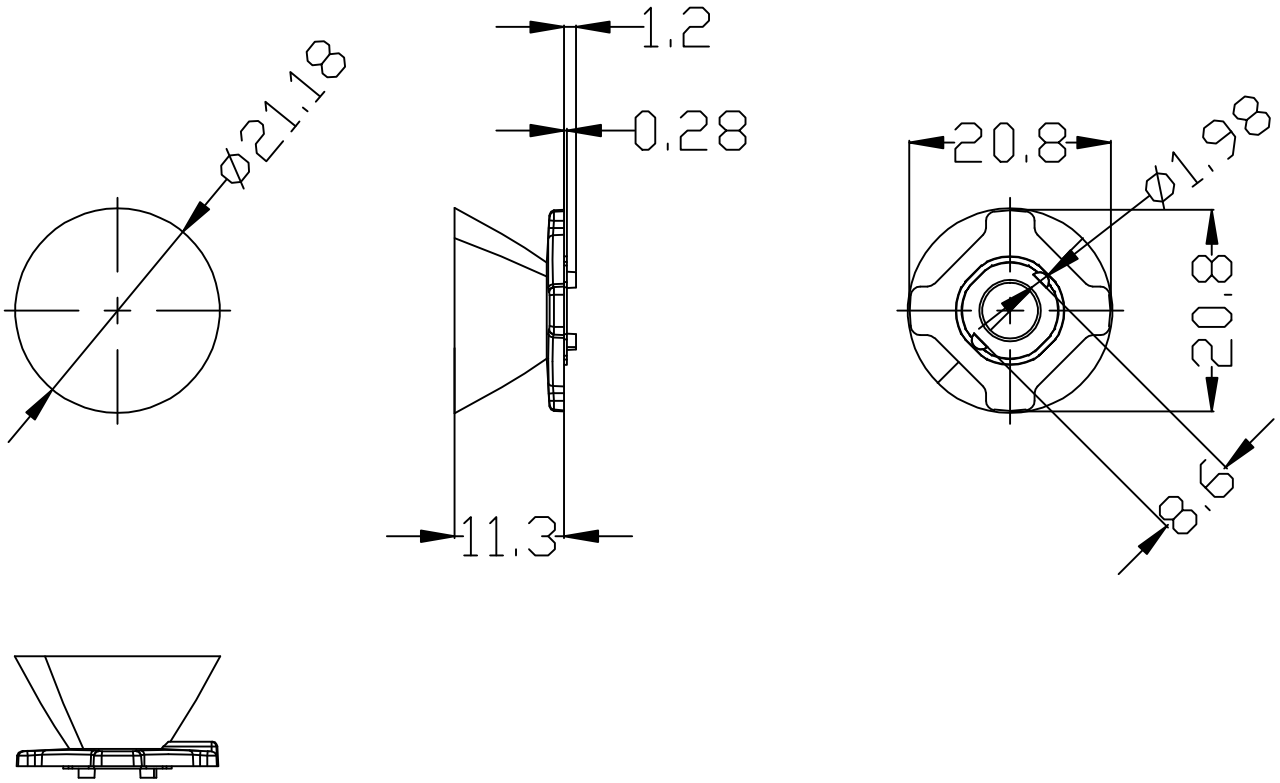

NOTE:
1. ALL SURFACES NO SHRINKAGE, BURRS, JUNCTION LINES ALLOWED
2. CRITICAL DIMENSIONS ARE INDICATED ON THE DRAWING
3. ALL INDICATED SURFACES ARE POLISHED, THE OPTICAL SURFACE POLISHING MUST BE SPI-A1 STANDARD
4. THE PARTS IS COMPLIANT TO ROHS AND REACH STANDARD

CHANGE													
					PART		顏色 COLOR	Transparency		SCALE	1:1	ASAHI OPTICS LIMITED	
					0 ~ 10	±0.05							
					10 ~ 20	±0.10	材質 MATERIAL	PMMA		UNIT	mm		
					20 ~ 30	±0.15							
	A/0	2018-09-18	NEW	——	——	30 ~	±0.20	設計 DESIGN	C. Y. CAI	2018-09-18	SIZE	A4	料號 PART NO. ALS21D30G
						Angle	± 1°						
	版次 REV	日期 DATE	變更說明 MODIFICATION DESCRIPTION	變更 CHANGE	核准 APPROVE	DIM	TOL	核准 APPROVE			SHEET		品名 Product: single lens