Transmittal, reproduction, dissemination and/or editing of this document as well as utilization of its contents and communication thereof to others without express authorization are prohibited.
未经允许禁止传输、复制、编辑该文档，以及利用其内容进行交流

REVISION RECORD				
REV	ECN	DESCRIPTION	DRFT	DATE

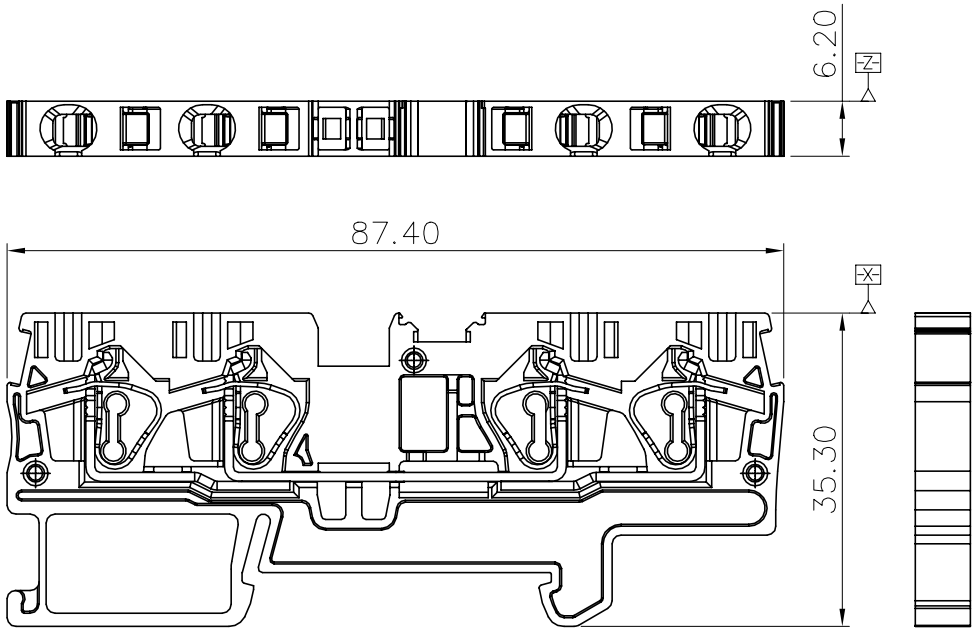

Connection method:
1. For Solid wire, peeling wire in right length, push down spring to clapthe wire.
2. For stranded wire, connect directly after peeling in right length, or wire furruled and fix in by pushingthe spring.

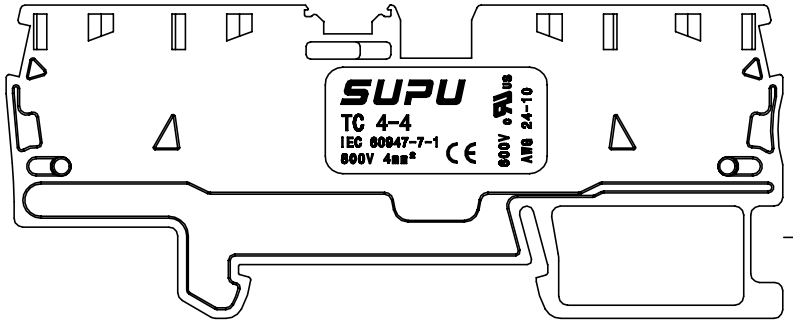

NOTES:
UL/CUL Standard
1.Conductor cross section : 24~10AWG
2.Rated Voltage/Current :

Use group	B	C	D
Rated voltage(V)	600	600	
Rated current(A)	30	30	

IEC Standard
1.Conductor cross section :

Wire range(Solid/Stranded)	0.2–4mm²
Solid	0.2–6mm²
Stranded	0.2–4mm²
Stranded with ferrules without plastic sleeve	0.2–4mm²
Stranded with ferrules with plastic sleeve	0.2–4mm²

2.Rated Voltage/Current :

Surge voltage category	Ⅲ
Pollution degree	3
Rated surge voltage(KV)	8
Rated voltage(V)	800
Rated current(A)	32

Material:

Insulator	PA66	UL94 V-0
Conductor	Copper alloy	Sn plated
Spring	Stainless steel	

General information:
1.Dimension shall be interpreted per ASME Y14.5–2009
2.Stripping length : 10mm
3.Operating temperature: −40°C~+105°C
4.RoHS Compliance
5.Undimensioned Tolerances:

Pitch Range In mm			Nominal Dimension Range In mm					— ⌒ ▱
TO 6	Over 6 TO 10	Over 10 TO 24	TO 30	Over 30 TO 60	Over 60 TO 100	Over 100 TO 150	Over 150	0.1/10
								∠
±0.15	±0.20	±0.30	±0.30	±0.50	±0.70	±1.00	±1.30	±2°

HOW TO ORDER:
TC4–4–XX
Sereies No.
Color:
GY: Grey
BU: Blue
OG: Orange

订货号 Order No.	TC4-4-XX		名 称 Name	TC系列笼式弹簧 4mm² 两进两出 接线端子	未注公差 Tolerance	表面 Surface	
项 目 Item	签 字 Signature	日 期 Date			Tolerances Table	VDI21	
设 计 Design	dfz	01/06/20″	图 号 Drawing No.	PRM000890	版本号 Revision Number	重量 Weight	比例 Scale
审 核 Check	cw	01/06/20″	材 料 Material	Notes	M2	/	1:1
工 艺 Process	-	-	物料号 Item No.	411503201	第1页/共1页 1 of 1		mm
标准化 Unify	-	-		411503202	SUPU 宁波速普电子有限公司		
批 准 Approve	lwl	01/06/20″		411503203	NINGBO SUPU ELECTRONICS CO.,LTD.		

借通用件登记 Common Part
原图号 Old Draw. No.
底图总号 Assembly No.